CHANGE			
EDITI	MODIFICATION	UPDATE DATE	SIGNATURE

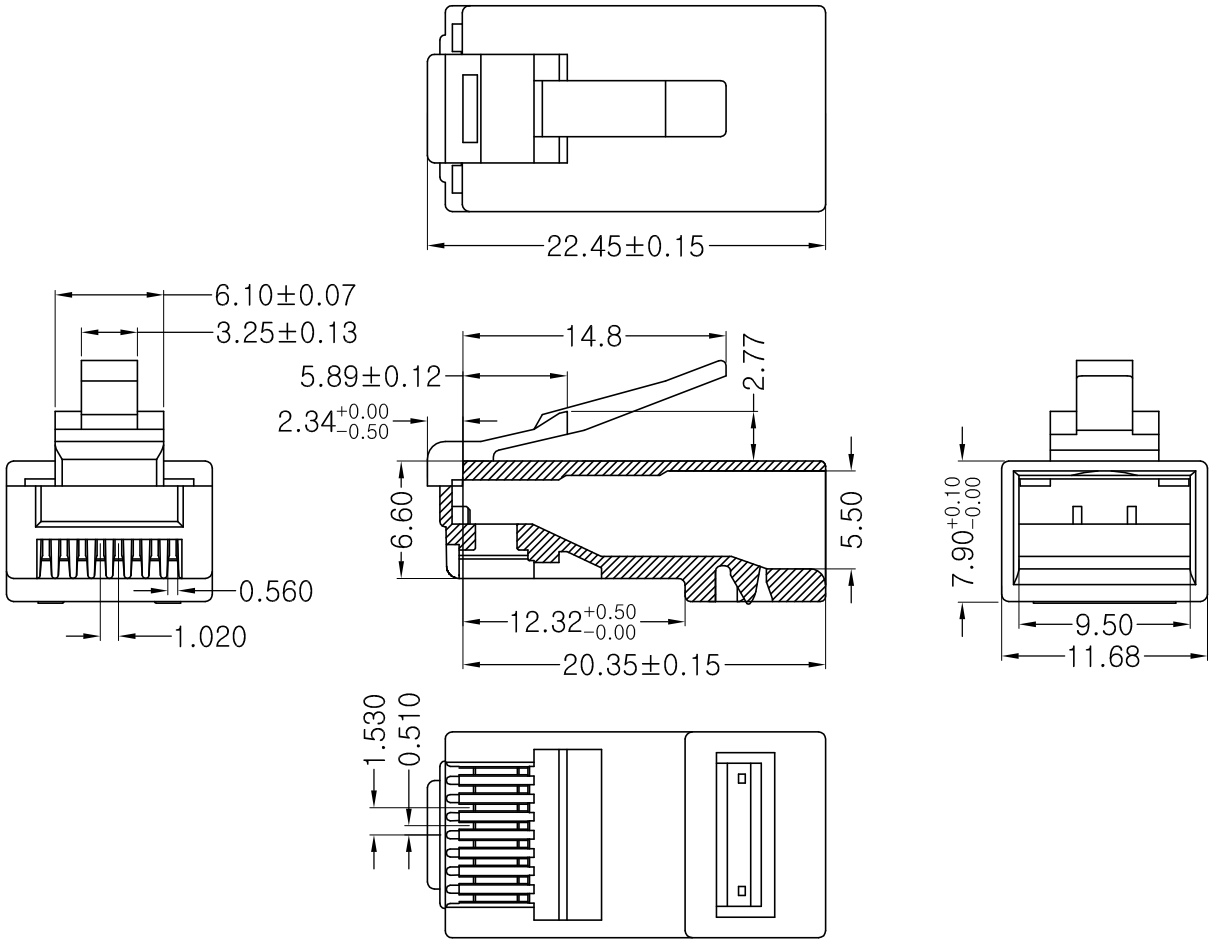

Inspection for Environmental Protection:

Based on the performed tests on submitted sample,
the test results are Compliant with the limits of RoHS and REACH.

Electrical Test:

A. 250V AC max, at 2A.
B. Dielectric withstanding 1000V DC/min, <0.5A.
C. Insulation Resistance: >500 MΩ, 1000V DC/min.
D. Contact Resistance: <20 MΩ.

Mechanical:

A. Cable-to-plug tensile strength-20LBS(89N)min.
B. Durability: 2000 mating cycles.

Operating Temperature: -40℃～+125℃.

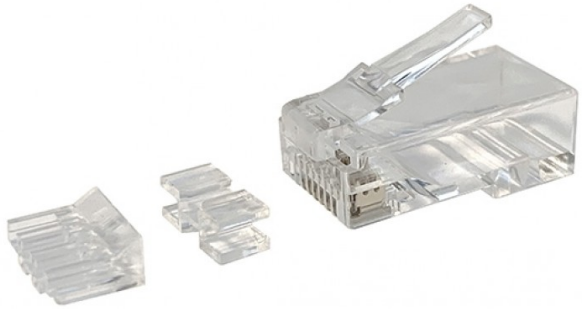

TERMINAL						OTHER
DRAWING						
MARK						

GOLD PLATING	Fu"	1u"	3u"	6u"	15u"	30u"	50u"	OTHER
MARK								

PRODUCT NO		DESCRIPTION				DWG NO	PED029
MATERIAL	PC	UNIT	MM	SCALE	NULL	EDITI	B/0
DIMENSIONAL TOLERANCE X.X ±0.2 X.XX ±0.10 X.XXX ±0.050 ANGLE ±2°		THIRD ANGLE PROJECTION		DRAWN		DATE	2012.04.07
				CHECK		DATE	
				APPROVAL		DATE	